Magnetic field in a lithium rod ring

R.C. Fernow
Brookhaven National Laboratory

14 November 2006

We examine the magnetic field inside a current-carrying lithium rod that is bent into a closed ring. The field is determined numerically using cylindrical current sheets. The center of circulation of the magnetic field moves radially outwards from the center of the rod as the radius of curvature of the ring is decreased.

1. Introduction

One idea for possibly obtaining very low 6D emittance cooling is to use a bent current-carrying lithium rod [1]. More recently it has been suggested to bend the rod into a closed ring [2]. Up until now the magnetic field for this configuration was modeled in ICOOL by the superposition of a dipole field with the field of a straight lithium rod. We describe in this note a new algorithm available in ICOOL that computes this field with more accuracy[1].

2. Method for calculating the field

Consider a circular rod with radius *a* that is bent into closed ring of radius *R*. This problem can be attacked analytically by using the vector potential for a circular current loop [3]. The total field is made up from the sum of the contributions from loops that span the circular cross section of the rod. The total vector potential at the observation point is given by

$$\vec{A}(\rho_o, \phi_o, z_o) = \frac{\mu_0}{4\pi} \iint dS\, J \int_0^{2\pi} \frac{1}{r} d\vec{s}$$

where *r* is the distance between the observation point and the integration point, expressed in cylindrical coordinates. Because of the symmetry we can take $\varphi_o = 0$.

[1] The results here use the new field type BROD in ICOOL beta version 3.02.

If we take pairs of current elements arranged symmetrically around $\varphi_o = 0$, then only the azimuthal component of **A** survives and we have

$$A_\phi\,(\rho_o, 0, z_o) = \frac{\mu_0}{4\pi}\iint dS\, J\, F(\rho, z)$$

where

$$F(\rho, z) = 2\int_0^\pi \frac{\cos\phi\,\rho\, d\phi}{\sqrt{\rho^2 + \rho_o^2 - 2\rho\rho_o\cos\phi + (z - z_o)^2}}$$

Since current only flows in the azimuthal direction, radial slices across the rod must be equipotential surfaces[2]. The potential difference between two of these surfaces is

$$\Delta V = \int E\, dl = \int \kappa\, J\, \rho\, d\phi$$

where κ is the resistivity of the lithium conductor, typically measured in Ω m. Since the resistivity and the current density do not vary with azimuth, we find that

$$\Delta V = \kappa\, J\, \rho\, \Delta\phi$$

Therefore we find that

$$J = \frac{\alpha}{\rho}$$

where α is a constant. The current density must be larger on the side of the rod closer to the center of the ring. It is fairly easy to do the φ integral for F(ρ,z) in terms of complete elliptic integrals. It is also possible to do the z integration, giving current sheets [4]. Unfortunately we have not been able to calculate or find a result for the remaining integral over ρ in closed form. Gallardo [5] has given a solution for a particular form of the current density that also has a term proportional to $1/\rho^2$.

We turn then to a numerical solution to the problem of finding the field inside the rod. ICOOL already has the capability of using cylindrical current sheets to find the field of a solenoid. If a set of these sheets were turned on their side and the length of each sheet adjusted to match the size of the rod at that radius, then the current flowing in the ring could be approximated as coming from a set of current sheets.

[2] This argument was suggested by Bob Palmer.

Figure 1 shows the projection of two circular current sheets located inside the bent lithium rod. Current only flows in the vertical portions of the rectangular projections.

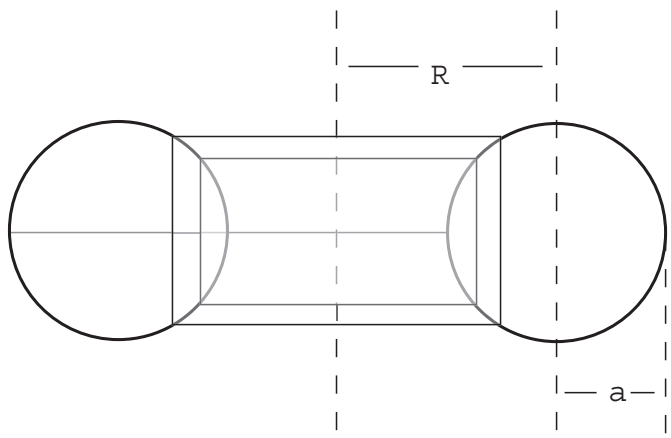

Figure 1. Orientation of two circular current sheets inside the bent lithium rod.

The current in each sheet is proportional to the radius of the sheet. We then define a field grid inside the rod with radii halfway in between the sheets and find the field at any point by interpolating from the grid values.

3. Properties of the magnetic field

Let x be the radial deviation from the center of the rod. The magnetic field lines inside the rod are shown as a function of x in Fig. 2.

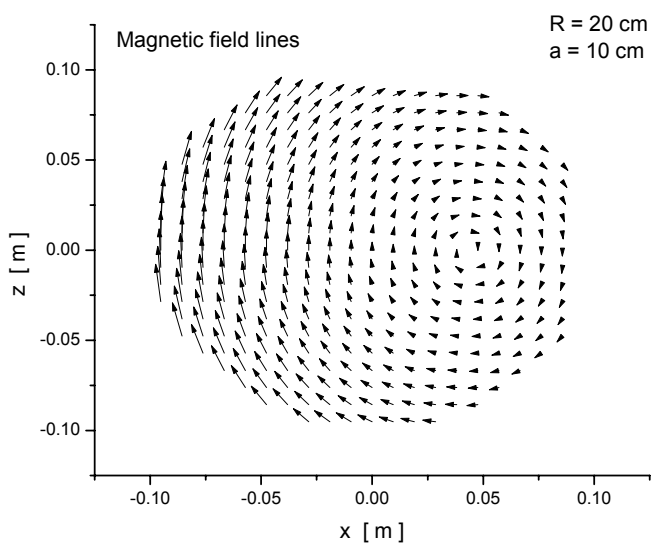

Figure 2. Magnetic field lines inside the bent lithium rod.

Note that the field is stronger on the side of the rod nearer the center of the ring. This comes about because of the presence of the current flowing in the opposite direction in the portion of the rod on the opposite side of the ring. The center of circulation of the field x_{CIRC} has moved radially outward, away from the center of the ring. This is shown numerically in Fig. 3 as a function of the radius of curvature of the ring.

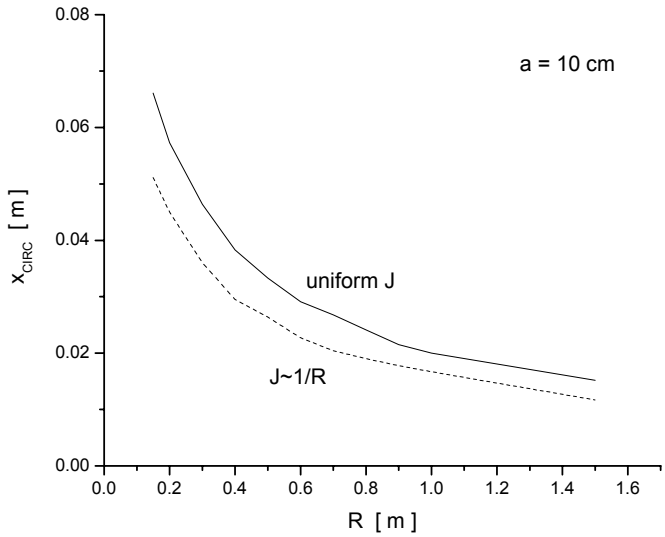

Figure 3. Radial position of the center of magnetic field circulation as a function of the radius of curvature of the ring.

In the limit $R \rightarrow \infty$ we must have $x_{CIRC} \rightarrow 0$. We also show the results of using a uniform current density in the bent rod. The vertical field in the rod along the midplane of the ring is shown in Fig. 4.

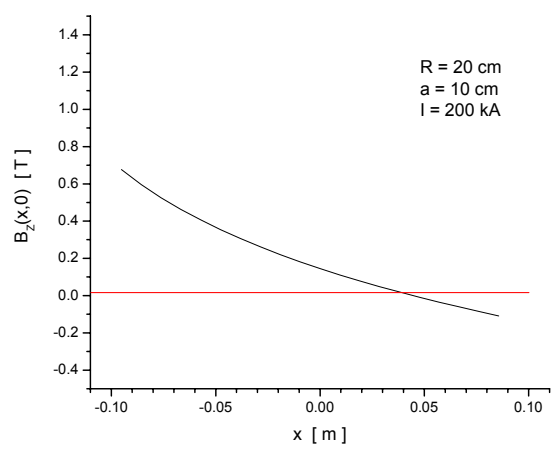

Figure 4. Vertical field in the rod along the midplane of the ring as a function of radial position.

For the conditions listed the maximum vertical field on the inner edge of the rod is ~0.7 T.

Acknowledgements

We would like to thank Yasuo Fukui, Bob Palmer and Juan Gallardo for useful discussions.

References

[1] A.N. Skrinsky, Ionization cooling and muon collider, in J. Gallardo (ed), Beam Dynamics and Technology Issues for μμ Colliders, AIP Conf. Proc. 372, p.133-139, 1996.

[2] Y. Fukui et al, A muon cooling ring with curved lithium lenses, NFMCC technical note 328, October 2005.

[3] W.R. Smythe, Static and Dynamic Electricity, 2nd ed., McGraw Hill, 1950, p. 270-271.

[4] M.W. Garrett, Calculation of fields, forces, and mutual inductances of current systems by elliptic integrals, J. Appl. Phys. 34:2567-2573, 1963.

[5] J. Galardo, Note on curved lithium lens, NFMCC technical note 503, 9 November 2006.